CONSTRUCTION PLANS FOR

ROOF REPLACEMENT
MINGO VALLEY DIVISION HQ
TULSA POLICE DEPARTMENT

10122 E 11th ST.
TULSA, OKLAHOMA

PROJECT NO. SP17-06
ACCOUNT NUMBER: 145400. BUILDINGS. 5452101-4053122-541104

CITY OF TULSA OKLAHOMA
ENGINEERING SERVICES DEPARTMENT

DRAWING INDEX

SHEET NO	TITLE
	COVER SHEET
G001	SUMMARY OF PAY ITEMS
A101	ROOF DEMOLITION PLAN
A102	ROOF PLAN
A103	FIRST FLOOR PLAN
A501	ROOF DETAILS
A502	ROOF DETAILS
E101	ELECTRICAL ROOF PLAN

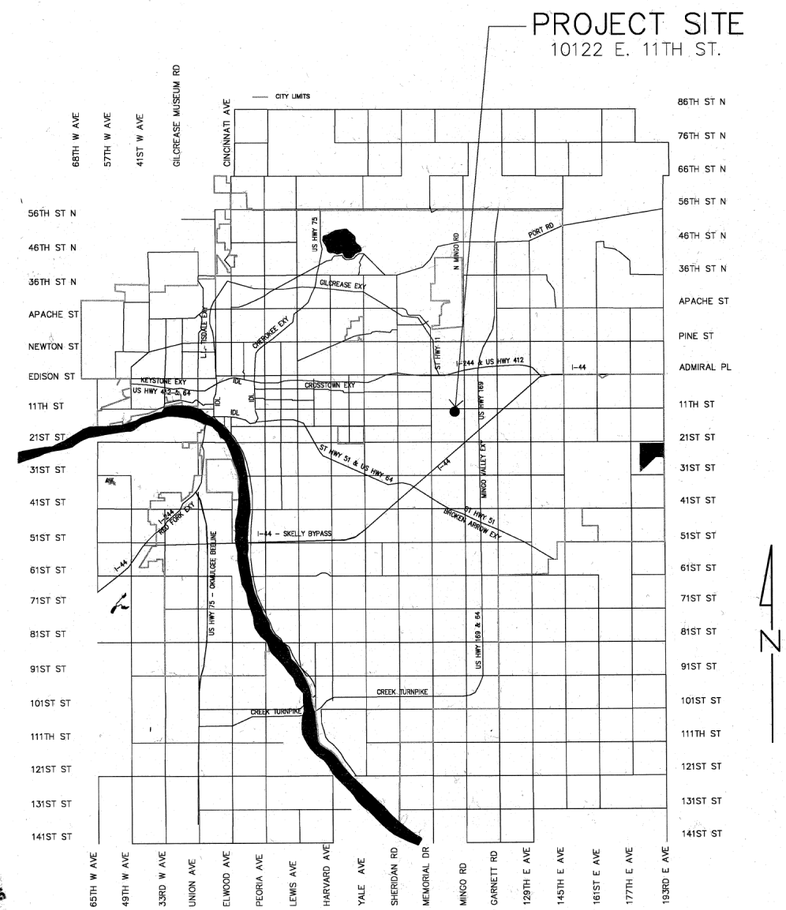

GENERAL NOTES

1. ALL CONSTRUCTION SHALL BE IN STRICT ACCORDANCE WITH CURRENT CITY OF TULSA ORDINANCES, ENGINEERING SERVICES STANDARDS SPECIFICATIONS AND STANDARD DETAILS. (CITY OF TULSA ORDINANCE AND CODES AMENDMENTS SUPERCEDE NATIONAL CODES)
2. CONTRACTOR SHALL BE RESPONSIBLE FOR DAMAGE TO ALL STRUCTURES, LANDSCAPING, PAVING AND ANY OTHER ITEMS LOCATED WITHIN AND OUTSIDE THE WORK AREA. ANY DAMAGE TO PERMANENT ITEMS INCURRED BY THE CONTRACTOR THROUGH HIS WORK IN THIS CONTRACT SHALL BE REPAIRED TO ORIGINAL CONDITION, BY THE CONTRACTOR AT HIS OWN EXPENSE.
3. CONTRACTORS WILL COORDINATE WITH IDENTIFIED MAINTENANCE OPERATIONS PERSONNEL FOR APPLICATION, SHUT OFF AND REMOVAL OF ALL UTILITIES.

UTILITY COORDINATION

CITY OF TULSA	NUMBER	NOTIFIED
UTILITY COORDINATOR	918-596-9649	
SPECIAL PROJECTS	918-596-9512	
STORMWATER DESIGN	918-596-9498	
TRAFFIC ENGINEERING	918-591-4286	
TRANSPORTATION DESIGN	918-596-9526	
WASTEWATER DESIGN	918-596-9564	
WATER DESIGN	918-596-9580	
BUILDING MAINTENANCE & OPERATIONS	918-596-9389	
IT NETWORK SERVICES	918-596-7070	
PLANNING & DEVELOPMENT (PERMITTING)	918-596-9456	
AEP/ PSO	918-599-2233	
AT&T	918-576-2142	
COX COMMUNICATIONS	918-286-4666	
ONG	918-831-8293	
CALL OKIE	800-522-6543	

BEFORE YOU DIG CALL OKIE

PLANS PREPARED BY:

SGA Design Group, P.C.
Christopher B. Goble, Architect
1437 South Boulder, Suite 550
Tulsa, Oklahoma 74119.3609
p: 918.587.8600
f: 918.587.8601
www.sgadesigngroup.com

BM

STATE OF OKLAHOMA
CHRISTOPHER B. GOBLE
2990
LICENSED ARCHITECT
11/01/2019

11/04/19
DATE/STAMP/SIGNATURE

CITY OF Tulsa
A New Kind of Energy™

APPROVED BY

CITY ENGINEER

12.16.19
DATE

ROOF REPLACEMENT MINGO VALLEY DIVISION HQ TULSA POLICE DEPARTMENT SP17-06

GENERAL SCOPE OF WORK

- REMOVE ROOF SYSTEM, INSULATION, WOOD BLOCKING AND FLASHING DOWN TO STRUCTURAL DECK.
- REMOVE RTU'S AND SECURELY STORE.
- REMOVE RTU CURBS FOR REPLACEMENT.
- REMOVE PARAPET CAP FLASHING.
- REMOVE GUTTER.
- REMOVE MISCELLANEOUS ROOFTOP EQUIPMENT PER 1/A101.
- CLEAN AND PAINT GAS LINES.
- INSTALL NEW POLY ISO INSULATION TO ACHIEVE R-VALUE OF R-25, NEW 1/4" DENS DECK, NEW FULLY ADHERED 80 MIL TPO MEMBRANE ROOF, ASSOCIATED FLASHING, WATERPROOFING PARAPET MEMBRANE AND CAP FLASHING.
- INSTALL GUTTER.
- INSTALL RTU CURBS.
- INSTALL ROOF HYDRANT
- REINSTALL EXISTING RTU'S AND RUN CONDENSATE PIPING.
- INSTALL PARKING LOT FLOOD LIGHTS.
- INSTALL LADDER SAFETY POST.
- INSTALL CONDENSATE PIT PER 2/A502.
- REPLACE WATER DAMAGED CEILING PANELS.
- MISCELLANEOUS REPAIRS.

UNIT KEY

EA	EACH
LF	LINEAR FEET
SF	SQUARE FEET
SQ	SQUARE (100 SQUARE FEET)
ALLOW	OWNER ALLOWANCE

TPD Mingo Valley Division HQ
SUMMARY OF PAY ITEMS

ITEM NO.	SPEC NO.	DESCRIPTION	PAY ITEM NOTES	UNIT	TOTAL
001	Contract Documents and Division One	General Requirements	A	EA	1
002	012100	Owner Allowance	B	ALLOW	1
003	055000	New Ladder Extender	C	EA	1
004	070150	Preparation for Re-Roofing	D	SQ	175
005	075423, 077114	Membrane Roofing System	E	SQ	175
006	077123	Replace Gutters	F	LF	164
007	077213	Manufactured Curbs	G	EA	6
008	079200	Joint Sealants	H	EA	1
009	099000	Painting and Coatings	I	EA	1
010	095110	Replace Ceiling Tiles and Light Lens	J	EA	40
011	221000	Roof Top Hydrant and Condensate Piping	J	EA	1
012	230500	RTUs Remove and Reinstall	K	EA	6
013	260500	Electrical	L	EA	1
014		Condensate Pit	M	EA	1
015					

PAY ITEM NOTES

A	General Requirements: General Conditions and miscellaneous direct and indirect Project costs required by the Contract Documents but not listed as a specific Unit Price Pay Item in the Proposal. Includes, but is not limited to: General Conditions covering miscellaneous non-staffing costs directly related to the Project, such as job trailer, mobilization, permit fees (other than Building Permit provided by City of Tulsa), temporary utilities, permanent utility connection fees, barriers, scaffolding, equipment rental, cleaning and dumpsters, etc. Each Unit Price will be deemed to include an amount considered by the Contractor to be adequate to cover Contractor's overhead and profit for each separately identified item.
B	Allowance to be included in the contract amount for additional scope of work to be performed by the Contractor not explicitly defined in the contract documents. Funds to be utilized only at the discretion of the Owner and must be agreed upon in written documentation between the Owner and Contractor. Any work performed by the Contractor not agreed upon in writing will be at Contractor risk. Any remaining balance will be credited back to the Owner by the Contractor upon final completion of Project.
C	Furnish and install ladder safety post. Furnish and install all materials, equipment, labor for complete installation ready for intended use in accordance with Drawings and Specifications.
D	Remove existing roofing system in preparation for new. Includes removal and disposal of existing roofing and waterproofing system down to structural deck, parapets and other substrates. Contractor shall examine existing substrate(s) and adjacent materials for rust, dry rot and other damage which could hinder the successful application of new roofing system. Contact Architect immediately upon discovery of damage.
E	Thermoplastic Polyolefin (TPO) Single Ply Membrane Roofing System. Roofing system includes, single-ply membrane (80 mil), fully-adhered to coverboard, over insulation (R=25 min), membrane flashings, sheet metal flashings and counter-flashings, roofing specialties, copings and curbs. Includes all labor, equipment, and materials required for a complete installation of a fully warranted and waterproof membrane roofing system, complete. Pay item quantity shown indicates roof footprint only. Contractor shall confirm his own quantities and bid the entire roof system accordingly. No additional material or labor cost allowed for vertical flashing or other components of the completed roofing system.
F	Furnish and install products in accordance with Drawings, Specifications and manufacturer's instructions. Install with lines and corners true and accurate, and in proper alignment for positive drainage. Coordinate installation with other substrates, flashing and trim, parapets, copings, walls and other adjacent work. Pay item quantity shown indicates total length of gutters and downspouts. Contractor shall confirm his own quantities and bid the entire gutter and downspout system complete. No additional cost allowed for variations between quantities noted and contractor's confirmed
G	Replace existing manufactured roof curbs with new, which shall be sized appropriately to: 1) Provide 8" (min) height above new roof membrane to top of curb around entire perimeter of curb. 2) To fit each existing and/or new RTU (with adapters if any) indicated to be reinstalled after roof membrane is in place. 3) To fit roof deck and field condition encountered. NOTE: Coordinate with RTU Removal and Replacement Pay Item.
H	Remove all existing joint sealants. Clean and prepare surfaces and substrates for joint sealant application. Seal all masonry where cracks or settlement has occurred. Provide all labor, equipment and materials as required for complete preparation and installation of Joint Sealants
I	Clean and prepare surfaces and substrates for paint systems application. Paint areas as indicated on Drawings. Perform the Work in accordance with the Drawings and Specifications and as required for a complete installation.
J	Furnish and install all materials, equipment, labor for complete installation ready for intended use in accordance with Drawings and Specifications.
K	Remove existing RTUs with adapters if any, from roof in order to replace roof curbs with new, ensuring that duct connections to the unit are disconnected before lifting. Once new roof curb and roof flashing are installed, extend and adjust existing duct work as required to properly align, seat and seal with reinstalled RTUs and adapters. Reconnect electrical, fuel and condensate drainage to RTU to provide a complete and functional HVAC system.
L	Demolish all existing roof top electrical conduit, piping, blocking and associated appurtances. Provide all labor, equipment, and materials required to disconnect and reconnect electrical services for installation of the roofing system. Provide and install weather tight conduit, disconnects, weather tight junction boxes, wire, conduit, piping, and conduit supports for complete installation. Replace all disconnects, photocells, and other misc electrical roof top equipment. Provide all labor, equipment, and materials required to disconnect and reconnect electrical services to all rooftop equipment. RTUs which are to be reused shall be served from above ceiling space inside building with conduit to come up inside roof curb without penetrating roof membrane, whenever possible. Notify architect immediately if not possible. Restore equipment to operation as quickly as possible. Coordinate any service disruption with City of Tulsa Field Engineering Services and building occupants. Perform work in strict accordance with Drawings and Specifications.
M	Cut pavement and excavate for installation of Condensate Pit per Detail 2/A502.

GENERAL NOTES

1. CONTRACTOR SHALL FIELD VERIFY ALL DIMENSIONS AND QUANTITIES.
2. COORDINATE ANY DISRUPTION OF SERVICES OR OPERATIONS WITH CITY CONSTRUCTIONS MANAGER.
3. IT IS THE RESPONSIBILITY OF THE CONTRACTOR TO VERIFY ALL EXISTING CONDITIONS PRIOR TO THE SUBMISSION OF HIS BID AND TO THE COMMENCEMENT OF ANY WORK. NO ADDITIONAL COMPENSATION WILL BE PAID DUE TO THE CONTRACTOR'S FAILURE TO ACQUAINT HIMSELF WITH EXISTING SITE CONDITIONS WHICH INCLUDE, BUT ARE NOT LIMITED TO QUANTITY AND EXTENT OF SURFACES AND MATERIALS OR UTILITIES.

SYMBOLS LEGEND

- SKYLIGHT
- AIR HANDLING UNIT
- ROOF DRAIN
- ROOF TOP UNIT
- TAPERED CRICKET
- VENT/ EXHAUST HOODS (DEMO)
- ABANDONED EQUIPMENT (DEMO)
- ROOF PENETRATIONS REMAINING
  ROOF PENETRATIONS (DEMO)
- GENERAL ROOF SLOPE DIRECTION (DOWN)
- GAS — GAS PIPING
- 8-A3 — FULL AND PARTIAL SECTION INDICATOR
- 1 — KEYNOTE
- 5 / A2 — ENLARGED DETAIL INDICATOR
- 1 DETAIL NAME
  SCALE
  DETAIL TITLE

STATE OF OKLAHOMA
CHRISTOPHER B. GOBLE
2990
LICENSED ARCHITECT

12/02/2019

ROOF REPLACEMENT
MINGO VALLEY DIVISION HQ
TULSA POLICE DEPARTMENT

PROJECT NO.:SP 17-06

CITY OF TULSA, OKLAHOMA
ENGINEERING SERVICES DEPARTMENT

SGA Design Group, P.C.
Christopher B. Goble, Architect
1437 South Boulder, Suite 550
Tulsa, Oklahoma 74119.3609
p: 918.587.8600
f: 918.587.8601
www.sgadesigngroup.com

MK	REVISION	BY	DATE

PLAN SCALE: 1" =	DRAWN	dah	12/2017	APPROVED:
	DESIGNED	dah	12/2017	
	SURVEY	N/A		
PROFILE SCALE: 1" =	PROJ. MGR.		11/19	
	LEAD ENGR.			
HORIZONTAL: 1" =	FIELD MGR.		12/19	
VERTICAL: 1" =	RECOMMENDED: DESIGN MANAGER		12-19	CITY ENGINEER
FILE:	DRAWING:			DATE: 11/04/2019
ATLAS PAGE NO:				SHEET 2 OF 8 SHEETS
SHEET NAME: SUMMARY OF PAY ITEMS				SHEET NO. G001

GENERAL NOTES

1. REMOVE EXISTING ROOF SYSTEM, INSULATION, WOOD BLOCKING AND FLASHINGS DOWN TO STRUCTURAL DECK.
2. REMOVE EXISTING ROOFTOP EQUIPMENT FOR CURB REPLACEMENT. SECURELY STORE UNITS TO BE RE-INSTALLED UNLESS NOTED OTHERWISE. COORDINATE CURB SIZE WITH EXISTING OR NEW UNITS. COORDINATE WITH OWNER TO MINIMIZE TIMING OF REMOVAL AND REINSTALLATION .
3. COORDINATE OPERATIONS TO PREVENT WATER INFILTRATION INTO BUILDING DURING CONSTRUCTION. CONTRACTOR WILL BE RESPONSIBLE FOR ANY WATER DAMAGES TO CONTENTS OF THE BUILDING DURING RE-ROOF OPERATIONS.
4. CONTRACTOR WILL BE RESPONSIBLE TO REPAIR ANY EXISTING ELECTRICAL DAMAGED DURING REROOFING OPERATIONS.
5. IF EXISTING STRUCTURAL DECK IS SHOWING SIGNS OF CRACKING, PLEASE NOTIFY ARCHITECT PRIOR TO PROCEEDING.
6. REMOVE ALL GRAVEL FROM ROOF SURFACE. DO NOT INSTALL MEMBRANE OVER ANY LOOSE GRAVEL ON ROOF SURFACE.

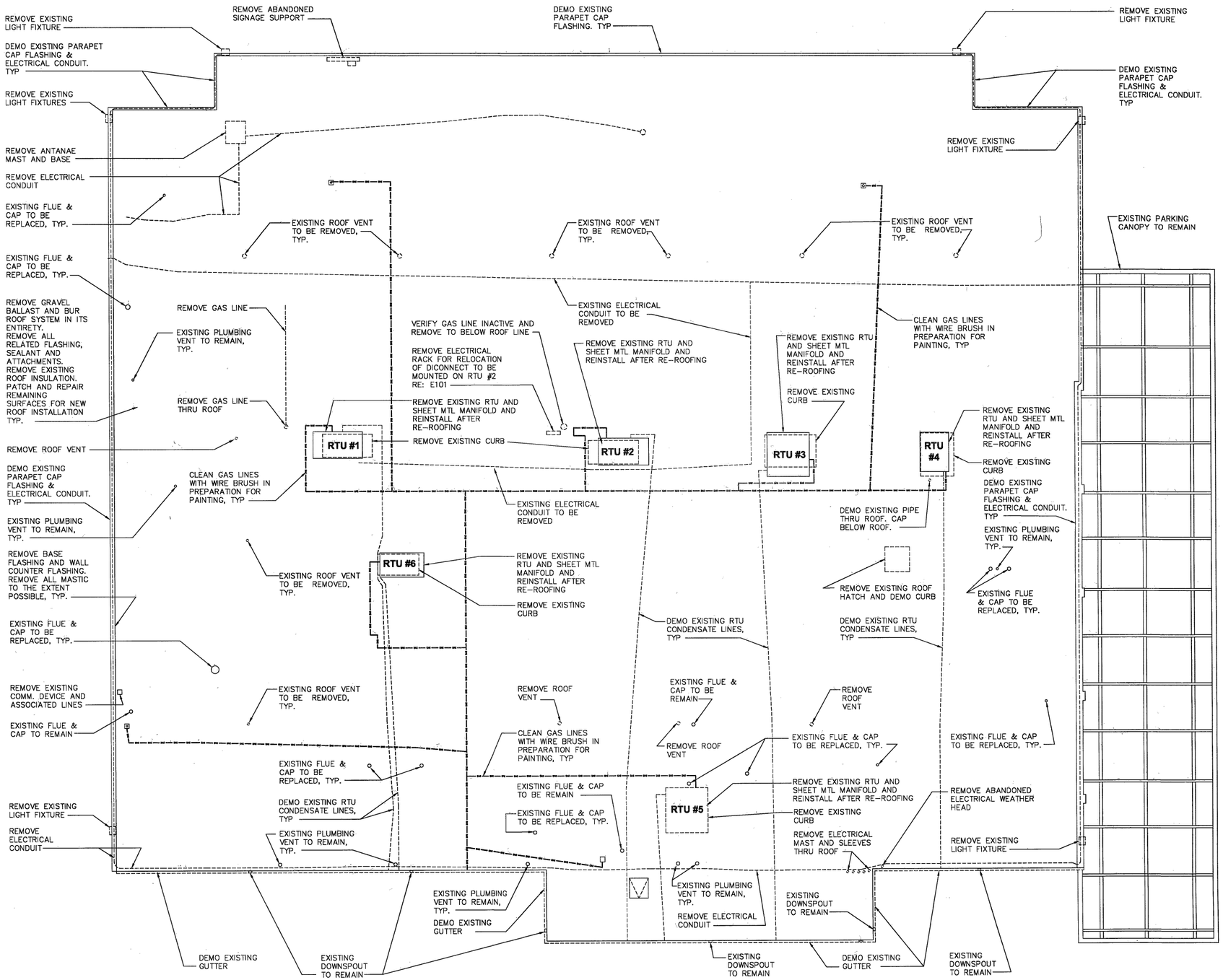

1 ROOF DEMOLITION PLAN
1/8" = 1'-0"

STATE OF OKLAHOMA
CHRISTOPHER B. GOBLE
2990
LICENSED ARCHITECT
11/01/2019

ROOF REPLACEMENT
MINGO VALLEY DIVISION HQ
TULSA POLICE DEPARTMENT

PROJECT NO.:SP 17-06

CITY OF TULSA, OKLAHOMA
ENGINEERING SERVICES DEPARTMENT

SGA Design Group, P.C.
Christopher B. Goble, Architect
1437 South Boulder, Suite 550
Tulsa, Oklahoma 74119.3609
p: 918.587.8600
f: 918.587.8601
www.sgadesigngroup.com

BM

MK	REVISION	BY	DATE

PLAN SCALE: 1" =	DRAWN	dah	12/2017
	DESIGNED	dah	12/2017
	SURVEY	N/A	
PROFILE SCALE: 1" =	PROJ. MGR.		11/19
	LEAD ENGR.		11/19
HORIZONTAL: 1" =	FIELD MGR.		11/19
VERTICAL: 1" =	RECOMMENDED: HAS 11-19 DESIGN MANAGER		

APPROVED:
CITY ENGINEER
DATE: 11/04/2019
FILE: DRAWING:
ATLAS PAGE NO:
SHEET 3 OF 8 SHEETS
SHEET NAME: ROOF DEMOLITION PLAN
SHEET NO. A101

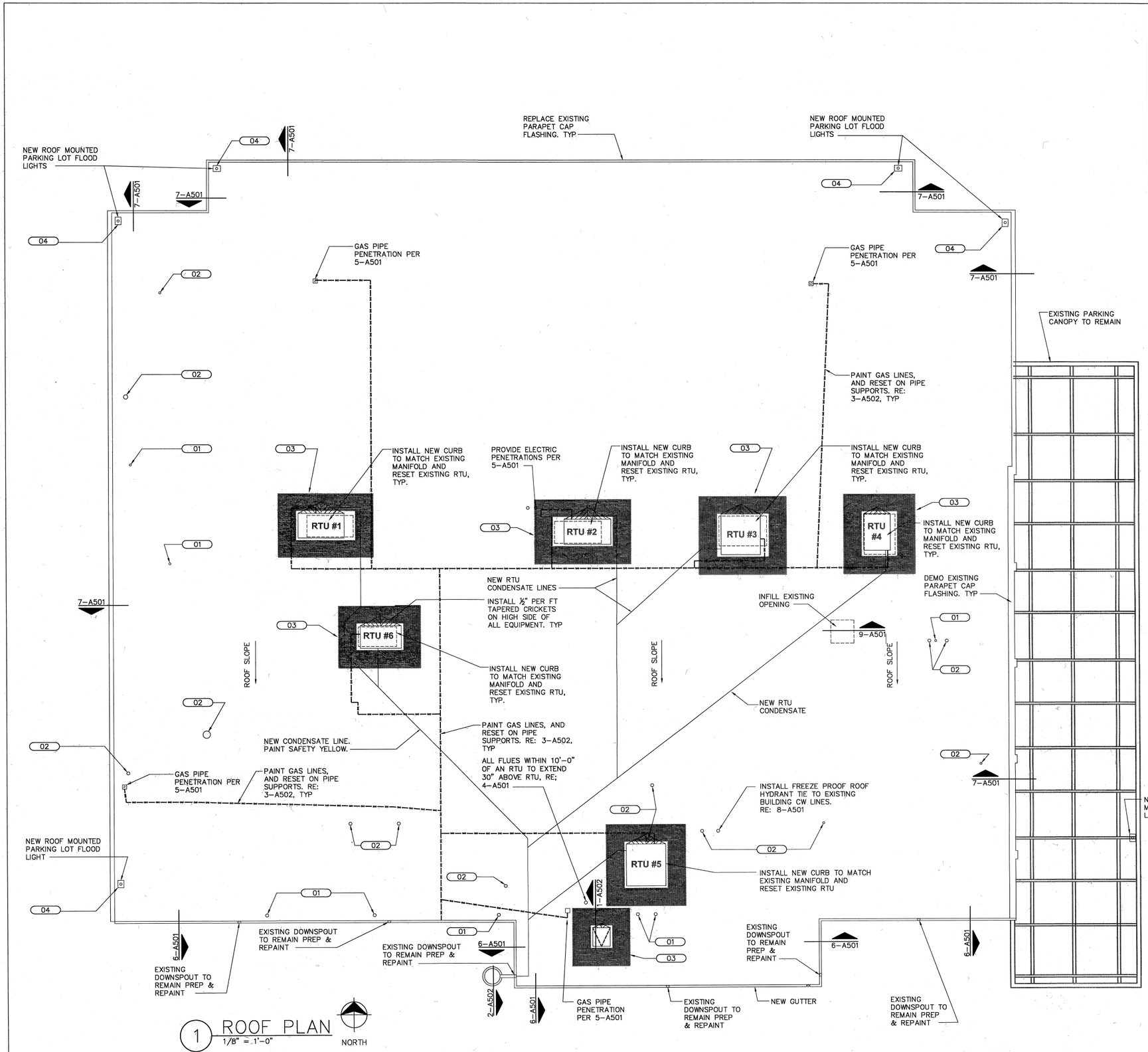

1 ROOF PLAN
1/8" = 1'-0"

INTERIOR SCOPE OF WORK

CONTRACTOR IS RESPONSIBLE FOR PROTECTING EXISTING BUILDING CONDITIONS PER SPECIFICATIONS SECTION 017700.3.1

REPLACE EXISTING WATER-DAMAGED INTERIOR CEILING PANELS WITH NEW AS DIRECTED BY ARCHITECT. PANELS TO MATCH EXISTING COLOR, PATTERN AND TEXTURE. TYPE AND QUANTITY AS FOLLOWS:

(20) 2X4 ACOUSTIC CEILING PANELS
(10) 2X4 VINYL FACED CEILING PANELS
(10) 2X4 ACRYLIC LIGHT FIXTURE LENSES

PROVIDE FULL PRODUCT PACKS AS SUPPLIED BY MANUFACTURER TO SUPPLY THE QUANTITY INDICATED. OWNER TO RETAIN UNUSED QUANTITIES.

GENERAL NOTES

1. COORDINATE RE-ROOFING OPERATIONS TO PREVENT WATER INFILTRATION INTO BUILDING DURING CONSTRUCTION. CONTRACTOR WILL BE RESPONSIBLE FOR ANY WATER DAMAGES TO CONTENTS OF THE BUILDING DURING RE-ROOF OPERATIONS.
2. COORDINATE ANY MECHANICAL FASTENERS WITH ELECTRICAL CONDUIT THAT MAY BE INSTALLED. CONTRACTOR WILL BE RESPONSIBLE TO REPAIR ANY EXISTING ELECTRICAL DAMAGED DURING REROOFING OPERATIONS.
3. STAGGER JOINTS BETWEEN LAYERS OF POLYISO INSULATION. NO JOINTS BETWEEN LAYERS SHOULD ALIGN.
4. INSTALL 1/2" TAPERED BOARD ON HIGH SIDE OF ALL MECHANICAL EQUIPMENT TO PROVIDE POSITIVE WATER DRAINAGE AROUND UNIT.
5. IF EXISTING STRUCTURAL DECK IS SHOWING SIGNS OF CRACKING, NOTIFY ARCHITECT PRIOR TO PROCEEDING.
6. DO NOT INSTALL MEMBRANE OVER ANY LOOSE GRAVEL OR DEBRIS ON ROOF SURFACE.
7. INSTALL BASE LAYERS OF POLY ISO TO PROVIDE A TOTAL R-VALUE OF R-25 UNDER TAPERED INSULATION.
8. MAINTAIN EXISTING ROOF SLOPE TOWARD GUTTER.
9. FLASH ALL ELECTRICAL PENETRATIONS THRU ROOF PER 5-A501. RE SHEET E101 FOR ELECTRICAL REQUIREMENTS.

KEYNOTES NOTES

01	PLUMBING VENT PENETRATION, RE: 1-A501 TYP.
02	FLUE/VENT PENETRATION, RE: 4-A501, TYP. PROVIDE NEW VENTILATOR CAP IF DAMAGED OR RUSTED.
03	WALKWAY PADS, TYP.. CUT PADS TO 10' MAX LENGTH. PROVIDE 3" SPACING BETWEEN ALL RUNS AND CHANGES IN DIRECTION. MAINTAIN 4" GAP FROM CURBS AND ALL PENETRATION FLASHINGS. TRIM BEFORE PAD INSTALLATION. DO NOT INSTALL PADS UNTIL PENETRATION FLASHINGS ARE COMPLETE.
04	FLASH ELECTRICAL PENETRATION THRU ROOF PER 5-A501. RE SHEET E101 FOR ELECTRICAL REQUIREMENTS.

ROOF REPLACEMENT
MINGO VALLEY DIVISION HQ
TULSA POLICE DEPARTMENT

PROJECT NO.:SP 17-06

CITY OF TULSA, OKLAHOMA
ENGINEERING SERVICES DEPARTMENT

SGA Design Group, P.C.
Christopher B. Goble, Architect
1437 South Boulder, Suite 550
Tulsa, Oklahoma 74119.3609
p: 918.587.8600
f: 918.587.8601
www.sgadesigngroup.com

STATE OF OKLAHOMA
CHRISTOPHER B. GOBLE
2990
LICENSED ARCHITECT
12/02/2019

MK	REVISION	BY	DATE

PLAN SCALE: 1" =	DRAWN	dah	12/2017	APPROVED:
	DESIGNED	dah	12/2017	
	SURVEY	N/A		
PROFILE SCALE: 1" =	PROJ. MGR.		11/19	
	LEAD ENGR.			
HORIZONTAL: 1" =	FIELD MGR.		12/19	
VERTICAL: 1" =	RECOMMENDED: HAS 12.19			
	DESIGN MANAGER			CITY ENGINEER
FILE:	DRAWING:			DATE: 11/04/2019
ATLAS PAGE NO:				SHEET 4 OF 8 SHEETS
SHEET NAME: ROOF PLAN				SHEET NO. A102

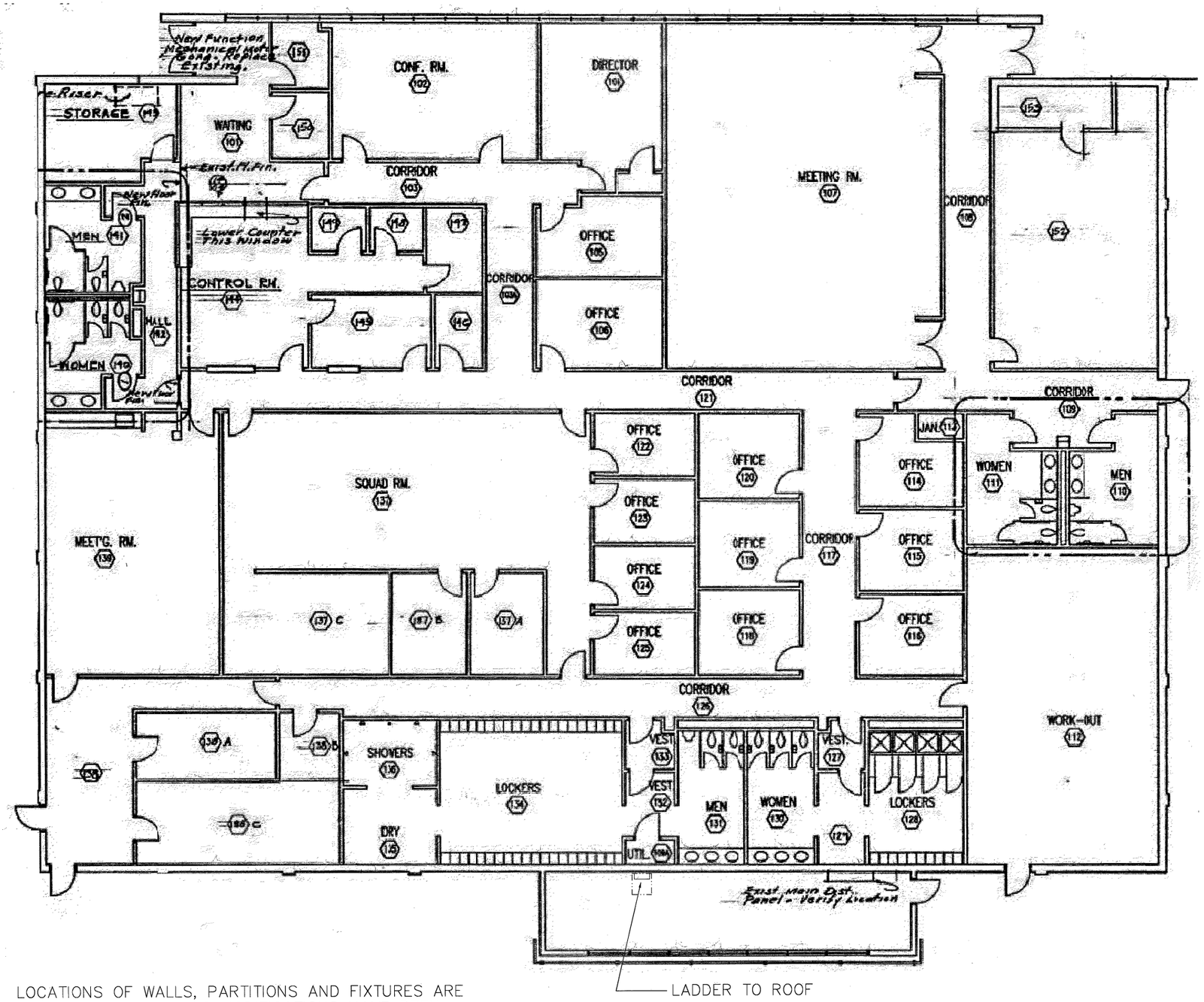

LOCATIONS OF WALLS, PARTITIONS AND FIXTURES ARE APPROXIMATE. BUILDING MODIFICATIONS HAVE BEEN MADE SINCE PLAN WAS DRAWN.

1 FIRST FLOOR PLAN—FOR REFERENCE ONLY

NOT TO SCALE

NORTH

STATE OF OKLAHOMA
CHRISTOPHER B. GOBLE
2990
LICENSED ARCHITECT

11/01/2019

ROOF REPLACEMENT

MINGO VALLEY DIVISION HQ

TULSA POLICE DEPARTMENT

PROJECT NO.:SP 17-06

CITY OF TULSA, OKLAHOMA

ENGINEERING SERVICES DEPARTMENT

SGA Design Group, P.C.

Christopher B. Goble, Architect
1437 South Boulder, Suite 550
Tulsa, Oklahoma 74119.3609
p: 918.587.8600
f: 918.587.8601
www.sgadesigngroup.com

BM

MK	REVISION	BY	DATE

PLAN SCALE: 1" =	DRAWN	dah	12/2017	APPROVED:
	DESIGNED	dah	12/2017	
	SURVEY	N/A		
PROFILE SCALE: 1" =	PROJ. MGR.		11/19	
	LEAD ENGR.		11/19	
HORIZONTAL: 1" =	FIELD MGR.		11/19	
VERTICAL: 1" =	RECOMMENDED:	HAS	11-19	
	DESIGN MANAGER			CITY ENGINEER
FILE:	DRAWING:			DATE: 11/04/2019
ATLAS PAGE NO:				SHEET 5 OF 8 SHEETS
SHEET NAME: FIRST FLOOR PLAN				SHEET NO. A103

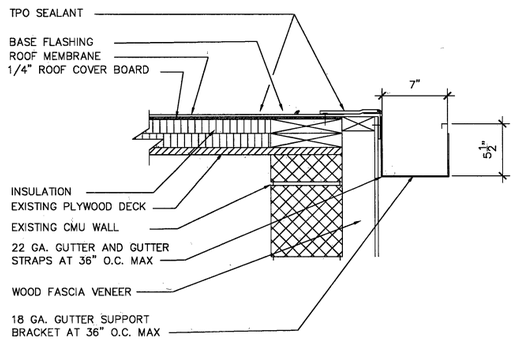

6 FLASHING MEMBRANE
1 1/2"=1'-0"

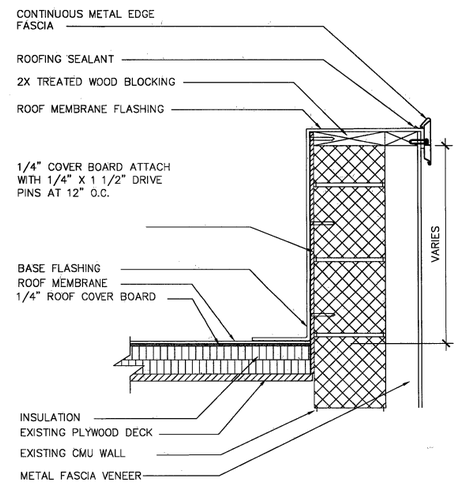

7 FLASHING MEMBRANE
1 1/2"=1'-0"

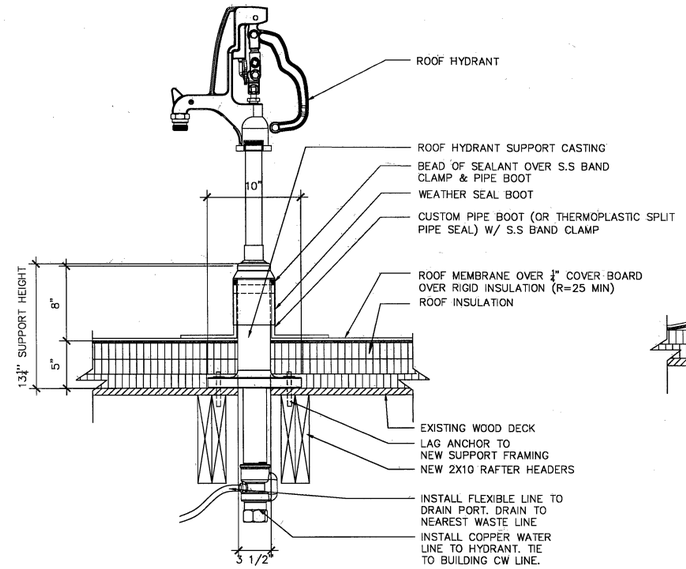

8 ROOF HYDRANT
1 1/2"=1'-0"

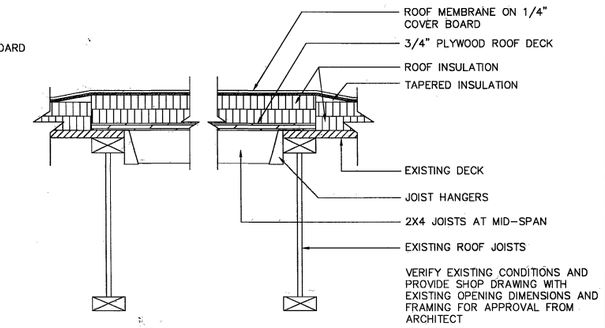

9 ROOF OPENING CLOSURE
1 1/2"=1'-0"

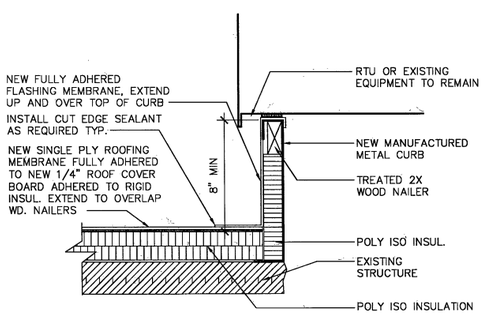

3 CURB DETAIL
1 1/2"=1'-0"

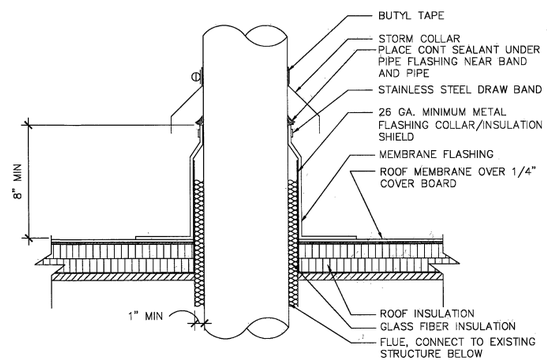

4 FLUE & VENT PENETRATION
1 1/2"=1'-0"

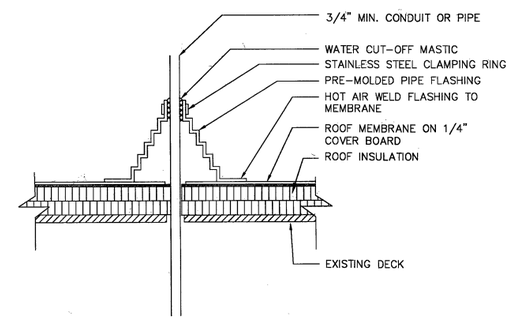

5 CONDUIT & PIPE PENETRATION
1 1/2"=1'-0"

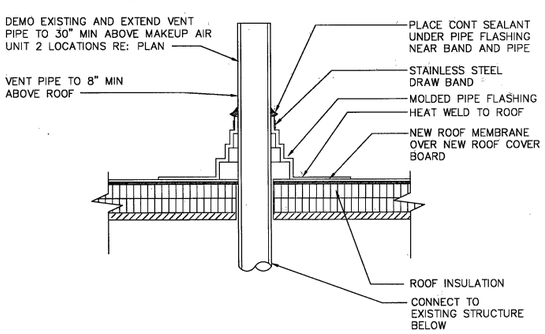

1 PENETRATION
1 1/2"=1'-0"

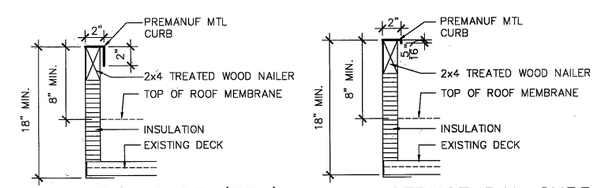

STRUCTURAL CURB (RTU)
RTU's AND LARGE MECHANICAL EQUIPMENT

NON STRUCTURAL CURB
EXHAUST FANS AND UNITS UNDER 150 LBS

IDENTIFY AND DIMENSIONALLY LOCATE EXISTING STRUCTURAL FRAMING IN CURB SUBMITTAL TO ARCHITECT

2 TYPICAL CURB DETAILS
1 1/2"=1'-0"

STATE OF OKLAHOMA
CHRISTOPHER B. GOBLE
2990
LICENSED ARCHITECT
11/01/2019

ROOF REPLACEMENT
MINGO VALLEY DIVISION HQ
TULSA POLICE DEPARTMENT

PROJECT NO.:SP 17-06

CITY OF TULSA, OKLAHOMA
ENGINEERING SERVICES DEPARTMENT

SGA Design Group, P.C.
Christopher B. Goble, Architect
1437 South Boulder, Suite 550
Tulsa, Oklahoma 74119.3609
p: 918.587.8600
f: 918.587.8601
www.sgadesigngroup.com

BM

MK	REVISION	BY	DATE

PLAN SCALE: 1" =	DRAWN	dah	12/2017	APPROVED:
	DESIGNED	dah	12/2017	
	SURVEY	N/A		
PROFILE SCALE: 1" =	PROJ. MGR.		11/19	
	LEAD ENGR.		11/19	
HORIZONTAL: 1" =	FIELD MGR.		11/19	
VERTICAL: 1" =	RECOMMENDED: HBS 11.19			
	DESIGN MANAGER			CITY ENGINEER
FILE:	DRAWING:			DATE: 11/04/2019
ATLAS PAGE NO:				SHEET 6 OF 8 SHEETS
SHEET NAME: ROOF DETAILS				SHEET NO. A501

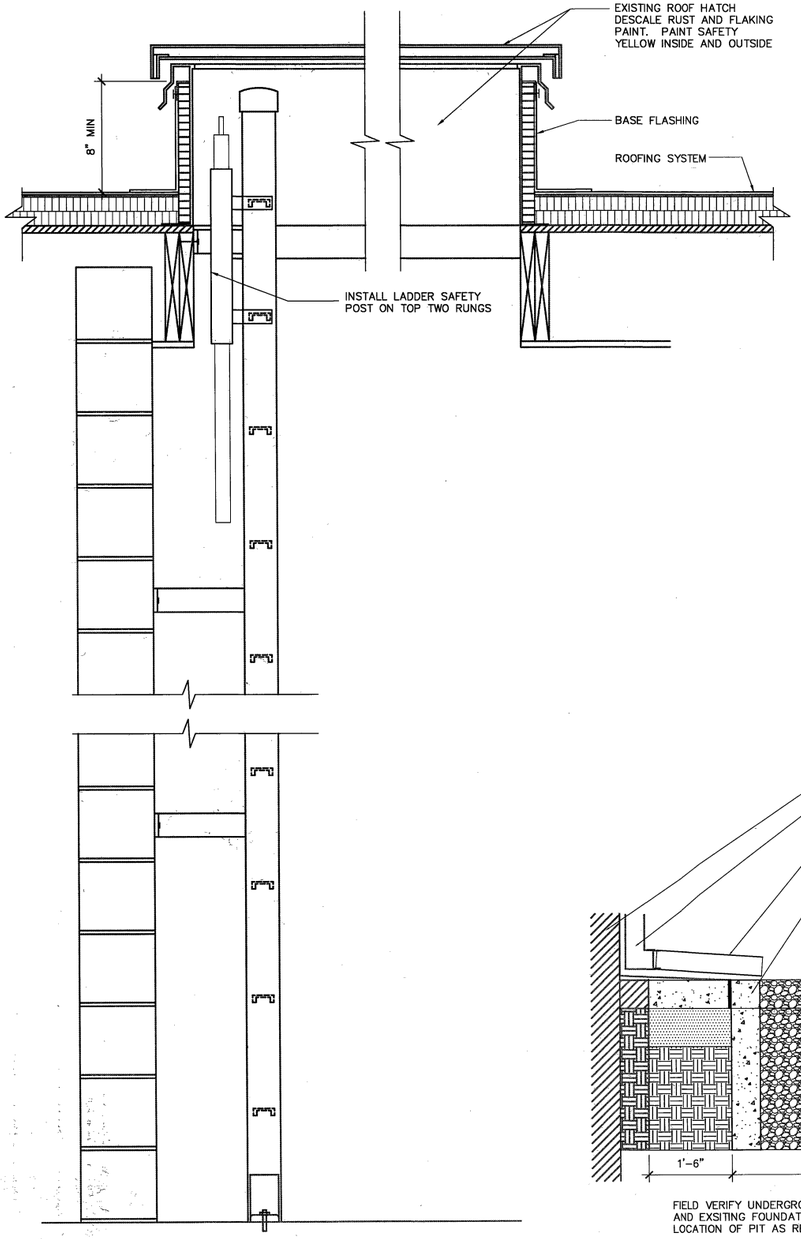

1 LADDER SECTION
1 1/2"=1'-0"

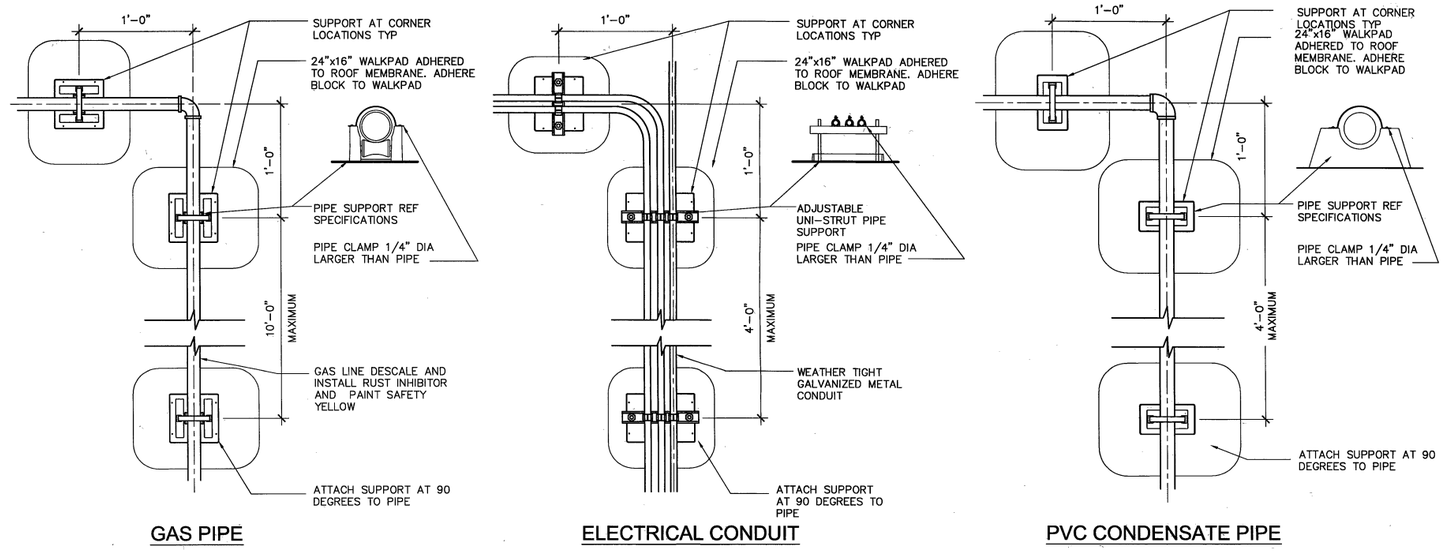

3 PIPING SUPPORT DETAILS
1"=1'-0"

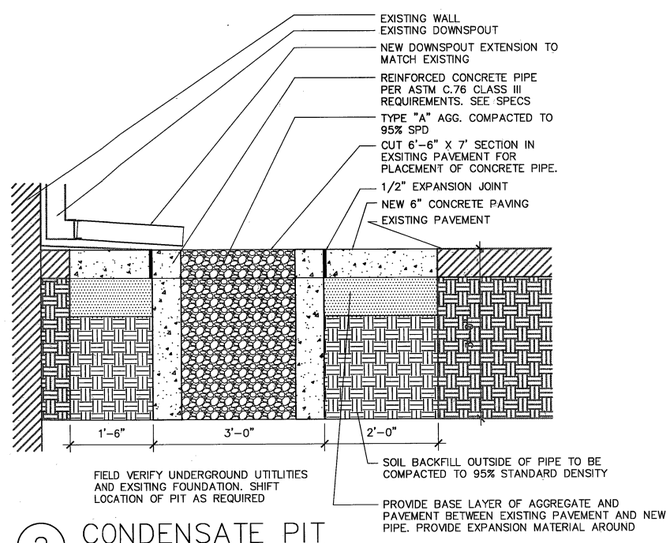

2 CONDENSATE PIT
3/4"=1'-0"

STATE OF OKLAHOMA
CHRISTOPHER B. GOBLE
2990
LICENSED ARCHITECT
12/02/2019

ROOF REPLACEMENT
MINGO VALLEY DIVISION HQ
TULSA POLICE DEPARTMENT
PROJECT NO.:SP 17-06

CITY OF TULSA, OKLAHOMA
ENGINEERING SERVICES DEPARTMENT

SGA Design Group, P.C.
Christopher B. Goble, Architect
1437 South Boulder, Suite 550
Tulsa, Oklahoma 74119.3609
p: 918.587.8600
f: 918.587.8601
www.sgadesigngroup.com

MK	REVISION	BY	DATE

PLAN SCALE: 1" =	DRAWN	dah	12/2017	APPROVED:
	DESIGNED	dah	12/2017	
	SURVEY	N/A		
PROFILE SCALE: 1" =	PROJ. MGR.		11/19	
	LEAD ENGR.			
HORIZONTAL: 1" =	FIELD MGR.		12/19	
VERTICAL: 1" =	RECOMMENDED: HAS 12-19			CITY ENGINEER
	DESIGN MANAGER			
FILE:	DRAWING:			DATE: 11/04/2019
ATLAS PAGE NO:				SHEET 7 OF 8 SHEETS
SHEET NAME: ROOF DETAILS				SHEET NO. A502

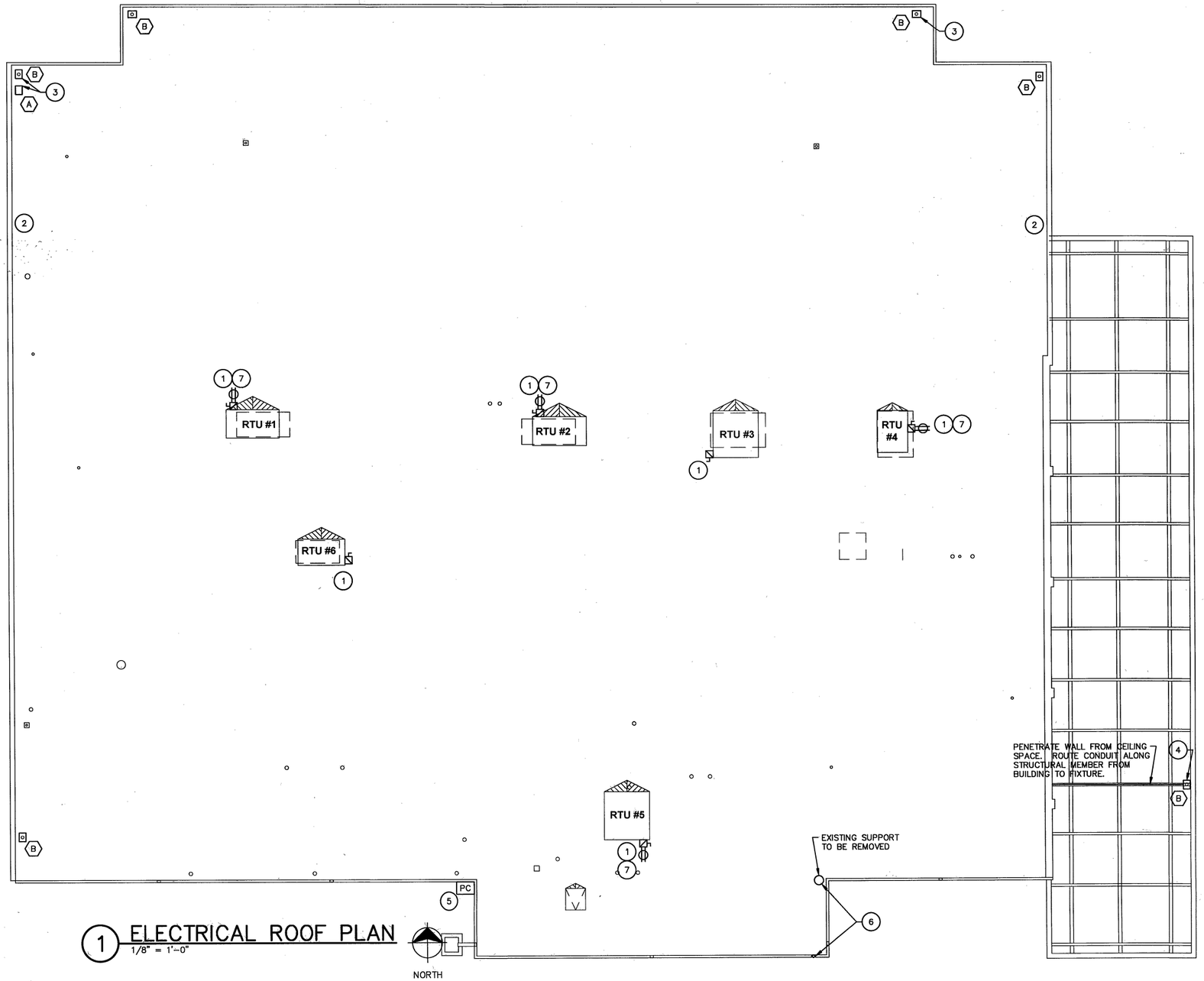

1 ELECTRICAL ROOF PLAN
1/8" = 1'-0"

KEYNOTES

1. EXTEND CONDUIT FROM CEILING SPACE TO WITHIN NEW ROOF CURB. PENETRATE WITHIN CURB AND EXTEND TO EXISTING DISCONNECT SWITCH. RTU AND RECEPTACLE CIRCUITS TO BE RE-USED. MATCH EXISTING WIRE SIZE.
2. APPROXIMATE LOCATION FOR ACCESS GATE CIRCUITS. NEW CONDUIT AND WIRE TO BE ROUTED ABOVE CEILING. PENETRATE EXTERIOR WALL 12" ABOVE INTERIOR CEILING AT LOCATION OF VERTICAL CONDUIT RUN TO ROOF AND INTERCEPT AND RECONNECT CIRCUIT. SEAL EXTERIOR WALL PENETRATION.
3. PROVIDE NEW MOUNTING FOR NEW LIGHT FIXTURES. REFER TO LIGHT FIXTURE SCHEDULE. CONNECT TO EXISTING PHOTOCELL CONTROLLED CIRCUIT. ROUTE NEW CONDUIT FOR LIGHT FIXTURES ABOVE CEILING AND PENETRATE ROOF THROUGH BOTTOM OF MOUNTING HARDWARE. PROPERLY SEAL ALL PENETRATIONS.
4. PROVIDE NEW MOUNTING FOR NEW LIGHT FIXTURES. REFER TO LIGHT FIXTURE SCHEDULE. CONNECT TO EXISTING PHOTOCELL CONTROLLED CIRCUIT. ROUTE NEW CONDUIT FOR LIGHT FIXTURES ABOVE CEILING AND PENETRATE WALL. PROPERLY SEAL ALL PENETRATIONS.
5. PROVIDE NEW PHOTOCELL COMPATIBLE WITH EXISTING CONTACTOR. EXISTING PHOTOCELL REMOVED FROM ROOF. ROUTE CONDUIT INSIDE ELECTRICAL ROOM TO PHOTOCELL LOCATION.
6. REMOVE EXISTING ROOF MOUNTED SUPPORT FOR OVERHEAD SERVICE LINES. ADD ADDITIONAL BRACING TO EXISTING WEATHER HEAD CONDUIT TO ADEQUATELY SUPPORT CONDUCTORS. CONNECT OVERHEAD SERVICE LINES DIRECTLY TO WEATHER HEAD SERVICE MAST USING EXISTING ATTACHMENT POINT.
7. PROVIDE NEW METALLIC TYPE IN-USE WEATHER PROOF ENCLOSURE AND COVER FOR RECEPTACLE. MAINTAIN MOUNTING LOCATION FOR RECEPTACLE. PROVIDE NEW WR/WP GFI RECEPTACLE. CONDUIT SHALL NOT BE ROUTED ACROSS ROOF.

GENERAL DEMO NOTES

1. ALL WORK SHALL BE PERFORMED IN STRICT COMPLIANCE WITH THE LATEST ADOPTED VERSION OF THE NATIONAL ELECTRICAL CODE (NEC), AND ALL APPLICABLE FEDERAL, STATE, AND LOCAL CODES. WHERE CONFLICTS ARISE, THE MOST STRINGENT REQUIREMENT SHALL APPLY.
2. ALL CONDUIT ROUTED ON SURFACE OF ROOF AND PARAPETS IS TO BE DEMOLISHED. CONDUITS SERVING EQUIPMENT THAT IS EXISTING TO REMAIN (ACCESS GATES, ETC.) ARE TO BE INSTALLED ABOVE CEILING INSIDE BUILDING AND PENETRATE AT THE LOCATION OF THE EQUIPMENT BEING SERVED. CONDUITS SERVING MECHANICAL EQUIPMENT SHALL BE INSTALLED ABOVE CEILING INSIDE BUILDING AND PENETRATE WITHIN THE ROOF CURB. NO CONDUIT SHALL BE ROUTED ACROSS ROOF.
3. CONTRACTOR SHALL VERIFY ALL COMMUNICATIONS AND OTHER LOW VOLTAGE WIRING IS NO LONGER IN USE AND DEMOLISH. LOW VOLTAGE WIRING CURRENTLY IN USE SHALL REMAIN.
4. CONTRACTOR SHALL DEMOLISH AND REPLACE ALL LIGHTING FIXTURES ON ROOF & PARAPET.

GENERAL NOTES

1. ALL WORK SHALL BE PERFORMED IN STRICT COMPLIANCE WITH THE LATEST ADOPTED VERSION OF THE NATIONAL ELECTRICAL CODE (NEC), AND ALL APPLICABLE FEDERAL, STATE, AND LOCAL CODES. WHERE CONFLICTS ARISE, THE MOST STRINGENT REQUIREMENT SHALL APPLY.
2. ALL PENETRATIONS SHALL BE PROPERLY SEALED IN ACCORDANCE ARCHITECTURAL DETAILS. ALL ROOF PENETRATIONS SHALL BE MADE AND SEALED IN A MANNER THAT MAINTAINS ROOF MANUFACTURER'S WARRANTY.

LIGHT FIXTURE SCHEDULE

(X)	MANUFACTURER	CATALOG NO.	VOLTS WATTS	LIGHT SOURCE	MOUNTING	FIXTURE NOTES
(A)	EATON – LUMARK	NFFLD-S-C70-D-UNV-66-S-BZ	120V 20W	LED, 4000K	SLIPFITTER, 3"	FLAG UPLIGHT, 3000L
(B)	EATON – LUMARK	NFFLD-C40-E-UNV-33-S-BZ	120V 143W	LED, 4000K	SLIPFITTER, 3"	PARKING FLOOD LIGHT, 17000L

GENERAL NOTES:
1 PROVIDE AND INSTALL 3' O.D. TENON FOR LIGHT FIXTURES. FIXTURES TO BE ELEVATED 6" ABOVE PARAPET ELEVATION.

ROOF REPLACEMENT
MINGO VALLEY DIVISION HQ
TULSA POLICE DEPARTMENT
PROJECT NO.:SP 17-06

CITY OF TULSA, OKLAHOMA
ENGINEERING SERVICES DEPARTMENT

SGA Design Group, P.C.
Christopher B. Goble, Architect
1437 South Boulder, Suite 500
Tulsa, Oklahoma 74119-3699
p: 918.587.8600
f: 918.587.8601
www.sgadesigngroup.com

MPW
MPW ENGINEERING, LLC
CERTIFICATE OF AUTHORIZATION #2040 • EXP 06/30/19
110 W. 7TH STREET • SUITE 600 • TULSA, OK 74119
(918) 582-4088 • (918) 582-4087 FAX

LICENSED PROFESSIONAL ENGINEER PATRICK TEAGUE 28037 1-Nov-19 OKLAHOMA

MK	REVISION	BY	DATE

PLAN SCALE: 1" =	DRAWN	pjt	12/2017	APPROVED:
	DESIGNED	pjt	12/2017	
	SURVEY	N/A		
PROFILE SCALE: 1" =	PROJ. MGR.		11/19	
	LEAD ENGR.		11/19	
HORIZONTAL: 1" =	FIELD MGR.		11/19	
VERTICAL: 1" =	RECOMMENDED: HDS		11·19	CITY ENGINEER
	DESIGN MANAGER			
FILE:	DRAWING:			DATE: 11/04/2019
ATLAS PAGE NO:				SHEET 8 OF 8 SHEETS
SHEET NAME: ELECTRICAL ROOF PLAN				SHEET NO. E101